Floor Vibration: Causes and Control Methods

Overview

Revised 2/2/2017

SBCA

SBCA has been the voice of the structural building components industry since 1983, providing educational programs and technical information, disseminating industry news, and facilitating networking opportunities for manufacturers of roof trusses, wall panels and floor trusses. **SBCA** endeavors to expand component manufacturers' market share and enhance the professionalism of the component manufacturing industry.

Introduction

- Wood truss floor systems are subject to vibrations from many sources.
- While considered negligible from a structural standpoint, vibrations can prove to be a point of contention between designers and customers.
- Floor vibrations are a serviceability issue that can affect customer satisfaction.

Background

- Occupant comfort can be compromised by vibrations and movements in a floor system, although it is often difficult to prevent all causes.
- The perception of excessive vibrations in a floor is based on human interpretations.

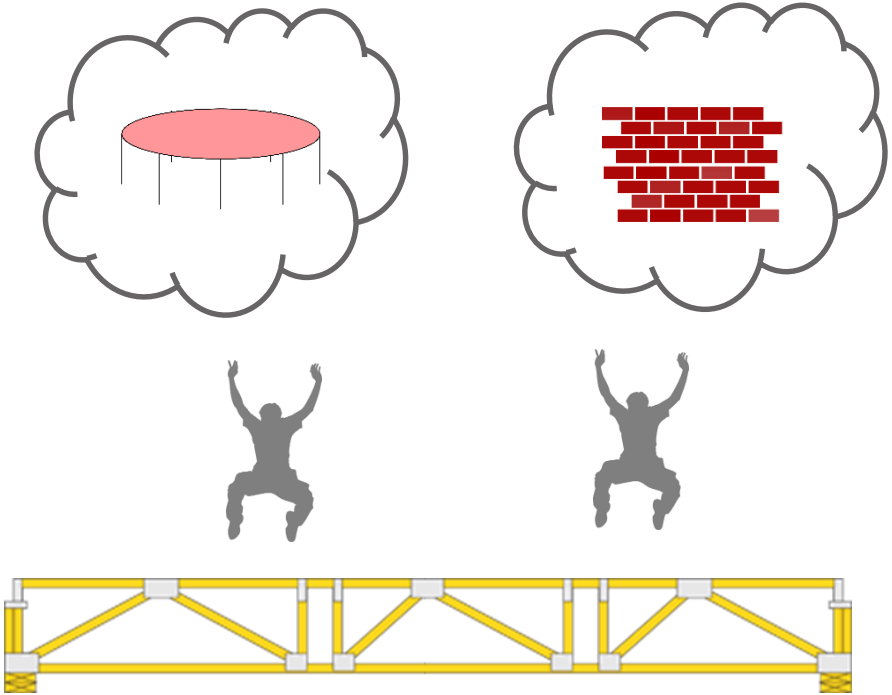

Background

- This graph from a study entitled "Classification of Human Induced Floor Vibrations" shows the acceleration of the floor system versus the frequency of vibrations applied to the floor.
- The general trend is less acceleration being perceived as more acceptable, but there are some exceptions.

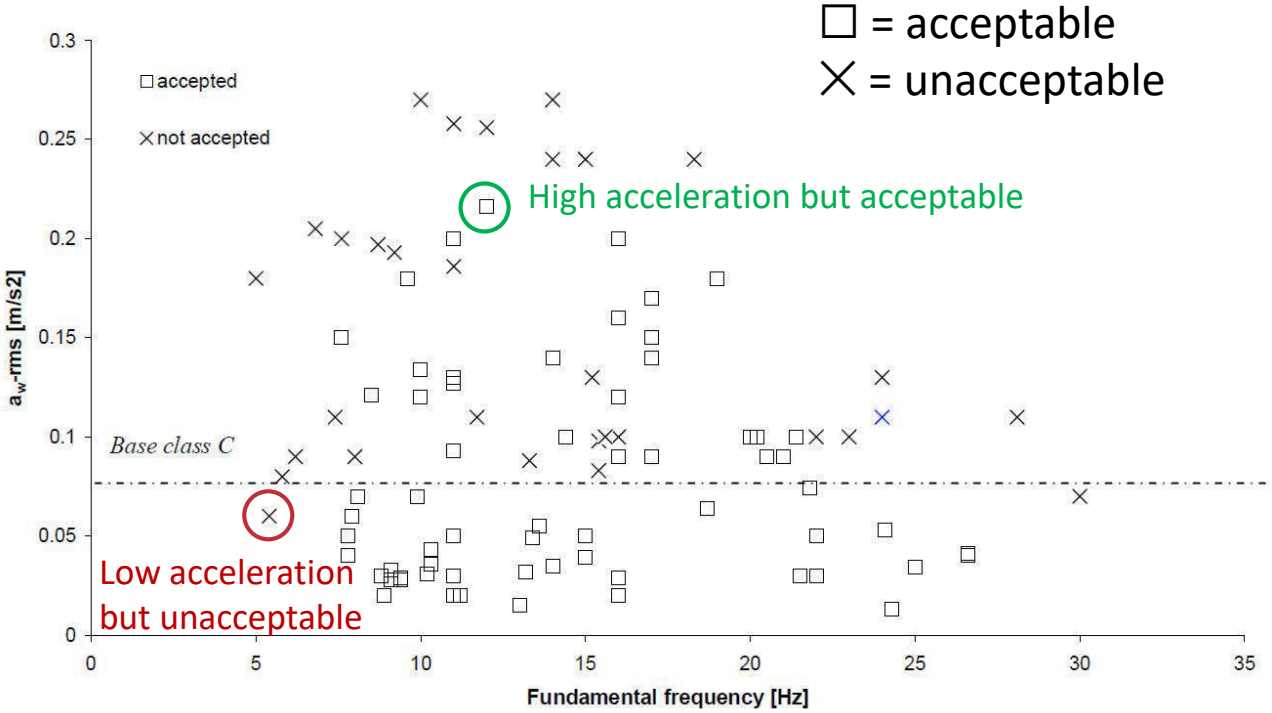

Background

- The study also showed that perceived performance of the floor was also heavily correlated with deflections caused by vibrations.
- The graph at right shows peak floor deflection versus the frequency of vibrations.
- Again, there was a trend toward lower deflection being perceived as more acceptable, but there were also exceptions.

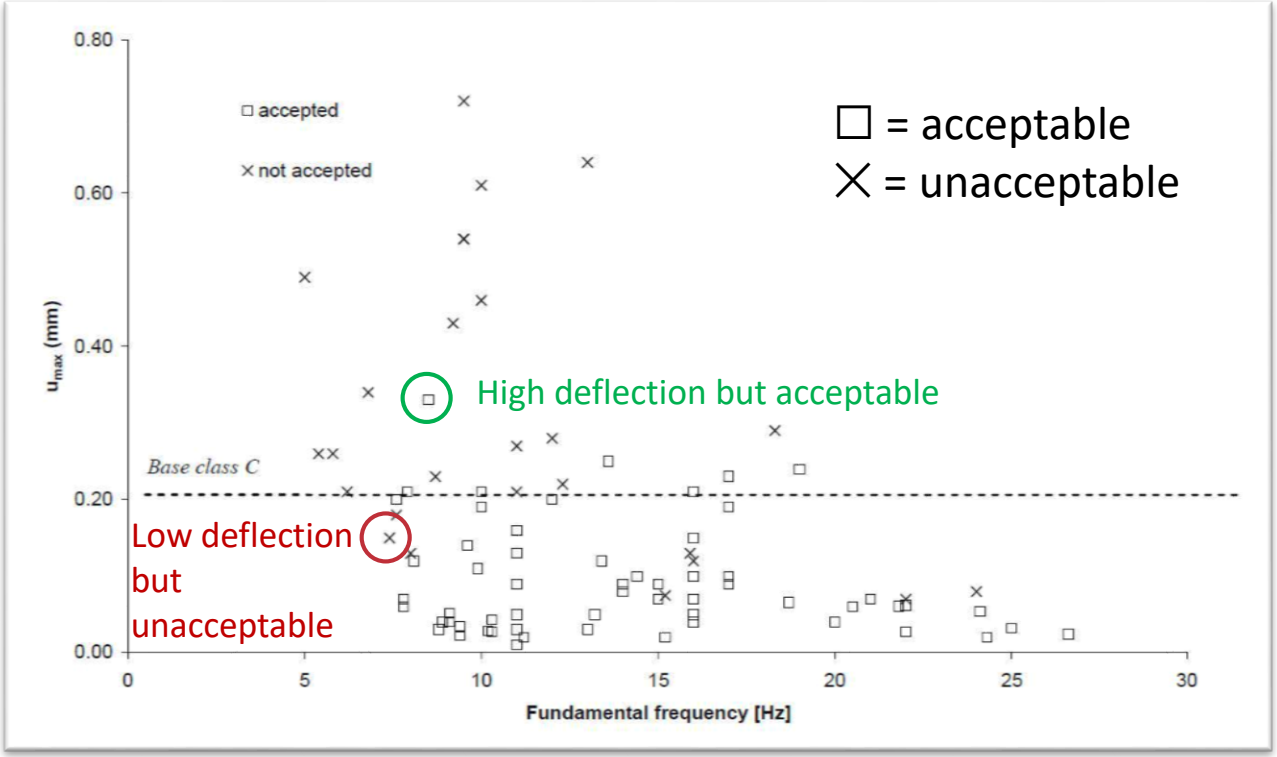

Sources of Vibrations

- Movement along the floor system, e.g. people walking:
  - The application of weight from each footstep causes accelerations and deflections in the supporting trusses

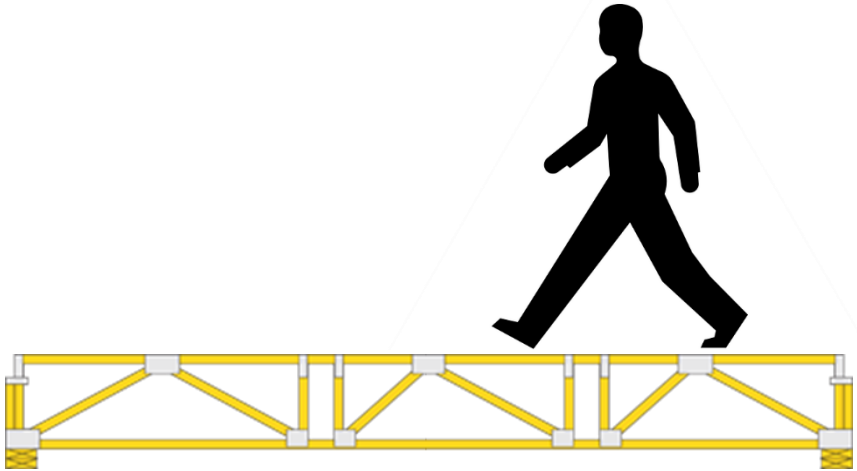

Sources of Vibrations

- Depending on the intensity of each footstep, two different frequencies may be created:
  - A low frequency vibration from the truss deflecting under the weight
  - If the step is “sharp” enough, a higher frequency will be generated by the impact between the person’s foot and the floor
- The same effects are seen when moving relatively heavy objects across a floor system.

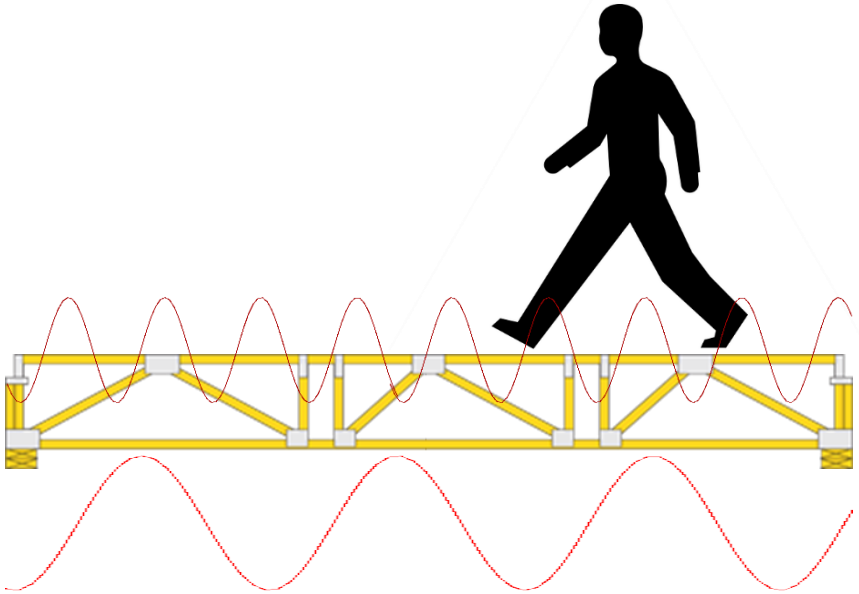

Sources of Vibrations

- Seismic activity from various sources can also cause vibrations:
  - Seismic activity from the ground (earthquakes)
  - Localized sources of vibrations such as railroad line or roadways
  - High sound volume areas such as airports and factories

Contributing Factors

- Materials used in the construction of the floor absorb and transmit vibrations differently and affect the stiffness of the system:
  - Joists or trusses
  - The upper sheathing and the bottom sheathing (if present)

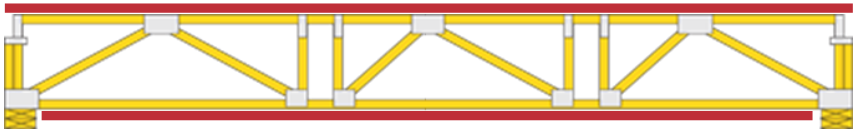

Contributing Factors

- Span length:
  - Larger spans tend to display more vibrations than shorter span, usually as a result of larger deflections

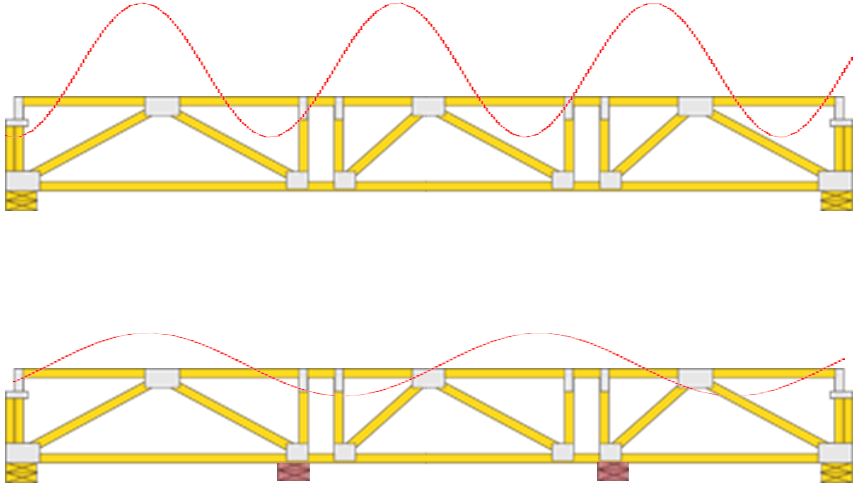

Contributing Factors

- Depth:
  - Shallow joists or trusses tend to deflect more and exhibit more vibrations than deeper ones

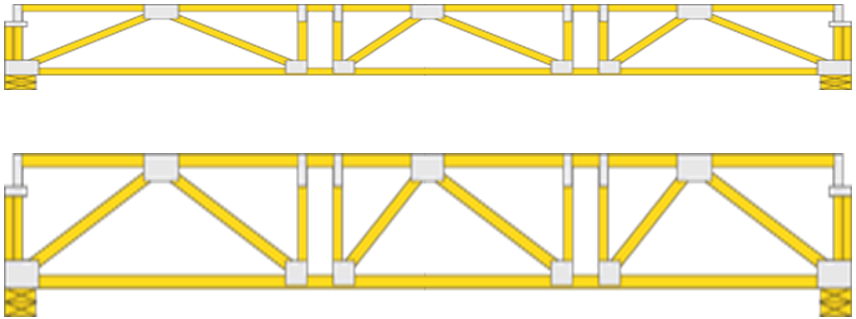

Contributing Factors

- Stiffness of the supports:
  - If a support is a beam or girder truss that will exhibit deflection this can cause an increase in the vibrations of the floor

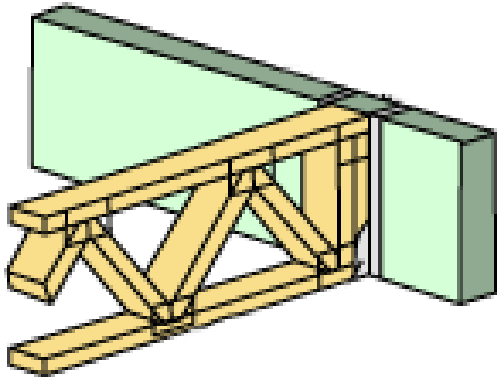

Contributing Factors

- Placement of furniture:
  - When furniture is placed between two or more joists or trusses which are deflecting at different rates, the furniture may increase perceived vibrations to the occupants

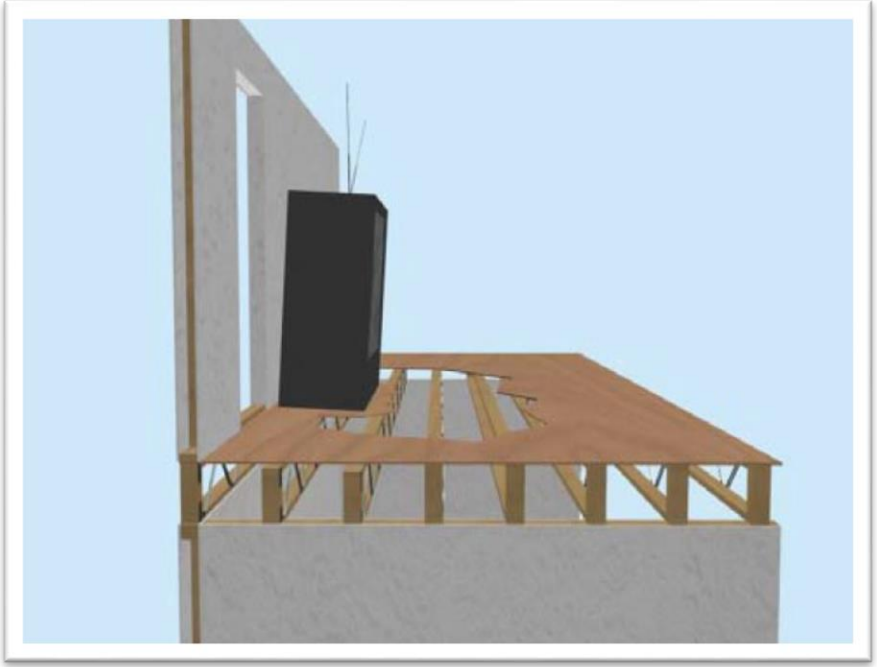

Solutions

- The designer may do any or all of the following:
  - Change the bearing conditions to decrease spans
  - Increase the truss depth
  - Reconfigure or increase webbing
  - Use higher strength materials
- The installer may do any or all of the following:
  - Install strongbacks as shown in BCSI-B7
  - Use construction adhesive when installing floor sheathing
  - Use stiffer floor sheathing designed to reduce vibrations
  - Apply rigid ceiling to the bottom chord
- See DrJ Best Practices Design Guide for more information

Conclusion

- Although vibrations in floor systems cannot be completely removed, there are many options to improve the overall perceived performance of the floor.

References

- *AWC Wood Frame Construction Manual* (WFCM) *for One- and Two-Family Dwellings*; American Wood Council; 2012
- *ANSI/TPI 3 – National Design Standard for Metal Plate Connected Wood Truss Construction*; Truss Plate Institute; 2014
- *Classification of Human Induced Floor Vibrations*; Tomi Toratti, Asko Talja; 2006. bua.sagepub.com
- *Serviceability of Floor Systems in Existing Residential Timber Frame Structures; Thomas Castle and David Pomerleau Ficcadenti & Waggoner C.S.E. Inc.; 2002*
- *Building Component Safety Information* (BCSI)-*B7 Guide to Temporary and Permanent Bracing for Parallel Chord Trusses jointly,* SBCA and the Truss Plate Institute, 2015

Floor Vibrations: Methods of Control

Design Guide

Revised 2/2/2017

SBCA

SBCA has been the voice of the structural building components industry since 1983, providing educational programs and technical information, disseminating industry news, and facilitating networking opportunities for manufacturers of roof trusses, wall panels and floor trusses. **SBCA** endeavors to expand component manufacturers' market share and enhance the professionalism of the component manufacturing industry.

Introduction

- Floor vibrations are a serviceability issue that can affect customer satisfaction.
- Occupant comfort can be compromised by vibrations and movements in a floor system, although it is often difficult to prevent all causes.
- The following are eight steps that can be taken to reduce vibrations in floor trusses

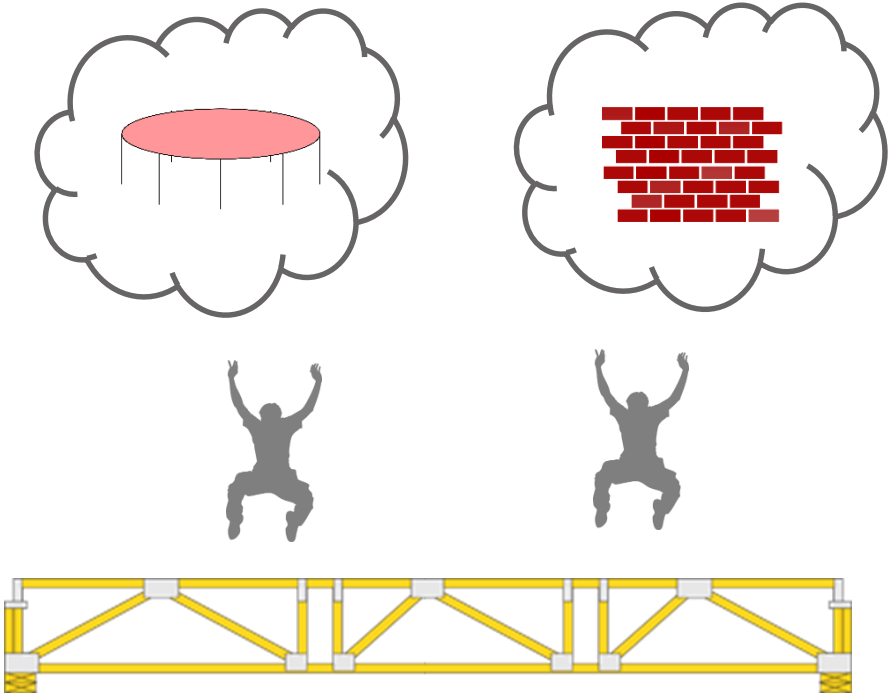

Step 1: Modify Truss Design

- Modify truss design to increase stiffness and reduce deflections
- Increase stiffness and reduce deflections
  - Higher strength members
  - Increased webbing

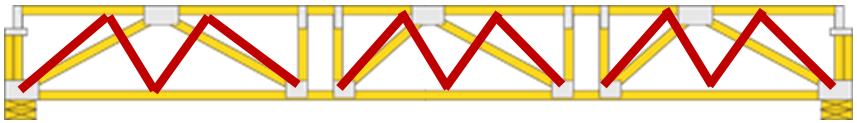

SPIB® No.2 KD19 HT 7 → SPIB® No.1 KD15 HT 7

Step 2: Reduce Span Length

- Larger spans tend to display more vibrations than shorter span, usually as a result of larger deflections
- Add additional bearing walls or supports

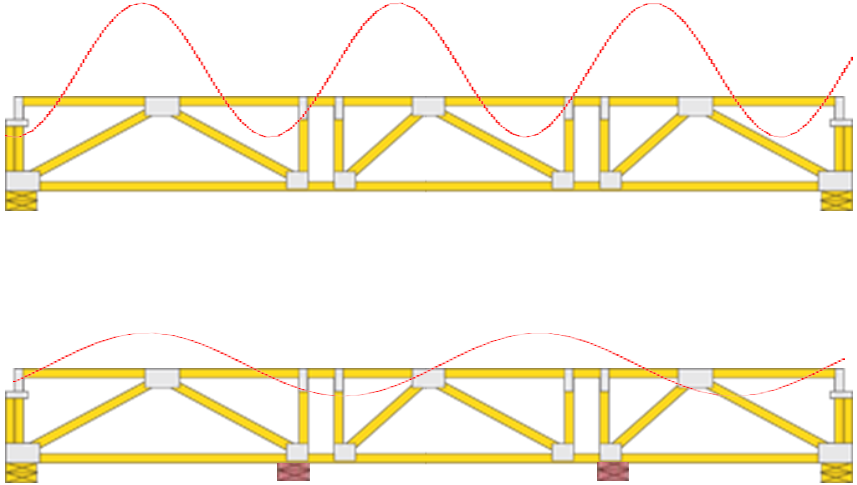

Step 3: Reduce Truss Depth

- Shallow joists or trusses tend to deflect more and exhibit more vibrations than deeper ones

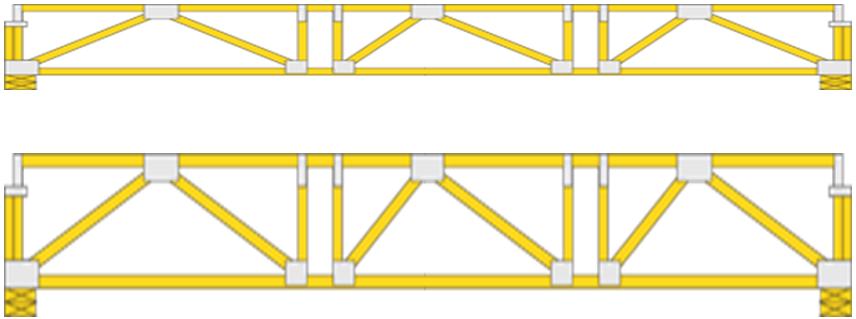

Step 4: Stiffness of Supports

- If a support is a beam or girder truss that will exhibit deflection this can cause an increase in the vibrations of the floor

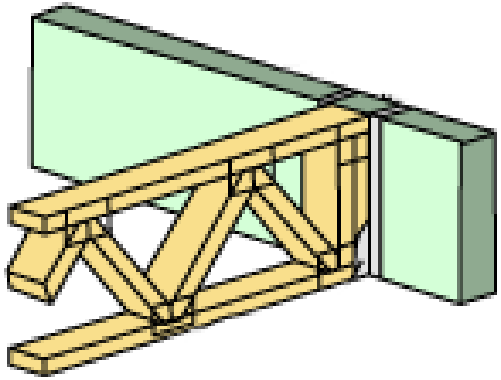

Step 5: Add Strongbacks

- If the floor system is already installed:
  - Strongbacks tie multiple trusses together, allowing forces, deflections and vibrations to be shared among adjacent trusses
  - BCSI-B7 provides information regarding the requirements for and installation of strongbacks in metal plate connected wood truss floor systems

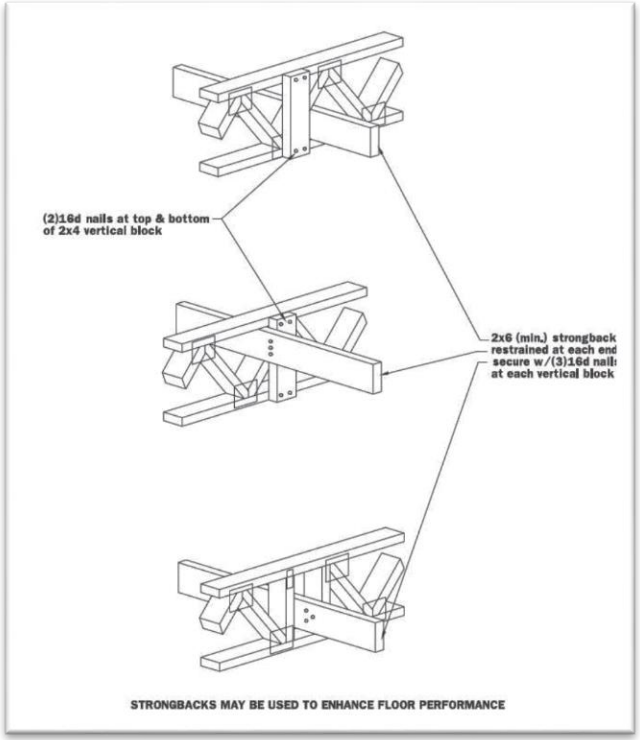

Step 6: Apply Rigid Ceiling

- Apply rigid ceiling on the bottom chord of the floor trusses:
  - The connection provided by the ceiling helps reduce the “twisting” of the truss and enhances truss stiffness

Step 7: Adhesive

- Use adhesive when installing the floor sheathing to the top chord of the truss:
  - The adhesive connection helps prevent slippage between the two surfaces and fills gaps creating a solid vertical connection for loads applied to the sheathing

Step 8: Floor Sheathing

- Finally, floor sheathing can be selected with a higher stiffness to aid in the overall perceived vibrations of a floor system
- Even when trusses installed in the floor system are properly designed, sheathing which allows too much deflection between trusses will hinder floor performance